VTM-TLM28DP-4K

Transcendent 28” 4K Professional Security LED Monitor with HDMI, DP, and USB Inputs







REAR CONNECTIONS

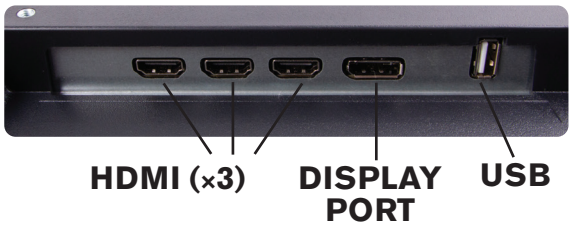

HDMI™ HIGH-DEFINITION MULTIMEDIA INTERFACE

TRANSCENDENT

4K 8MP

28” Professional LED Monitor

A PROFESSIONAL SECURITY MONITOR DESIGNED AND BUILT TO SUPPORT VITEK’S HIGHEST QUALITY INDUSTRIAL VIDEO PRODUCTS

Complete your security system with the cost-effective VITEK Transcendent Series “DP” NDAA Compliant Professional Grade HD Security Monitor. This 28” 8MP / 4K 16:9 backlit LED display is designed for 24/7 continuous use in critical security applications. Features a 50,000+ hour panel life with Dynamic Optimization, Natural Color, Contrast & Detail Enhancement, and more!

KEY FEATURES

- 28” TFT-LED Display with 16:9 Aspect Ratio
- Professional Grade Security Monitor Designed for 24/7 Continuous use in Security Applications with 50,000+ Hour Panel Life
- HDMI Inputs (× 3), Display Port (DP) Input + USB
- Resolution up to 3840 × 2160 (8MP / 4K)
- Integrated Stereo Speakers
- 3D Noise Reduction
- Super Slim Design
- Built-in 3D Comb Filter, Supports De-interlacing
- Contrast Ratio of 1000:1
- 5ms Response Time
- 1.073G Colors
- 178° Horizontal and Vertical Viewing Angle
- 16:9 Aspect Ratio
- 100mm VESA Standard Mount
- NDAA Compliant
- 3 Year Warranty

NDAA COMPLIANT

VITEK, IVP Inc. offers a full range of NDAA Compliant IP and HD COAX cameras, recorders and accessories, including point-to-multi-point wifi bridges, monitors, testers and more. See vitekcctv.com for the full product line-up and more info.

RoHS

SINCE 1997

An Eye On Innovation

VTM-TLM28DP-4K

SPECIFICATIONS

Panel Size / Type	28” TFT (Thin Film Transistor) LED Backlit Monitor
Active Display Area	24.45 (W) × 13.44 (H) / 620.93mm (W) × 341.3mm (H)
Resolution	3840 × 2160(4K / 8MP)
Aspect Ratio	16:9
Contrast Ratio	1000:1
Brightness	350 cd/m²
Response Time	5ms
Colors	1.073G
Pixel Pitch	0.1617 (H) × 0.1617 (V)
Color System	NTSC / PAL / SECAM
Viewing Angle	178° / 178° (Horizontal / Vertical)
Inputs	3 × HDMI, 1 × DP (Display Port), 1 × USB, 1 × PWR
Audio	2 × 3W Speakers
OSD Control	Auto Adjust, Brightness, Contrast, Horizontal / Vertical Position, Clock, Phase, Color, Language
3D Comb Filter	Yes
VESA Mounting	Yes
Other Features	Picture in Picture (P-i-P) Display, Anti-static, Anti-Magnetic Field, Anti-Interference, No Radiation
OSD Languages	English, Spanish, French, German, Italian, Dutch, Russian, Chinese
Power Consumption	<40W
Accessories	Industrial Power Supply, Screw, Cable holder, Quick Start Guide
Certificates	FCC, ROHS
Working Temp.	-22~185°F / -30~85°C
Dimensions	Without Stand: 25.95” × 1.86” × 14.97” (659.15 × 47.3 × 380.16mm)
Weight	15.4lb / 7kg

DIMENSIONS

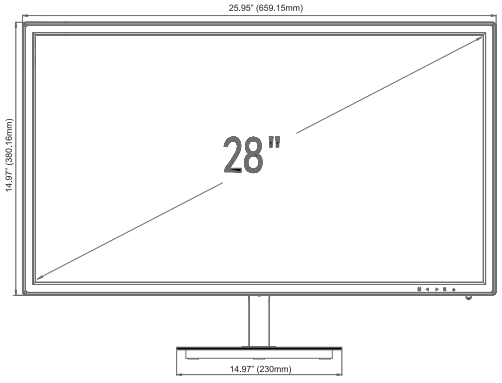

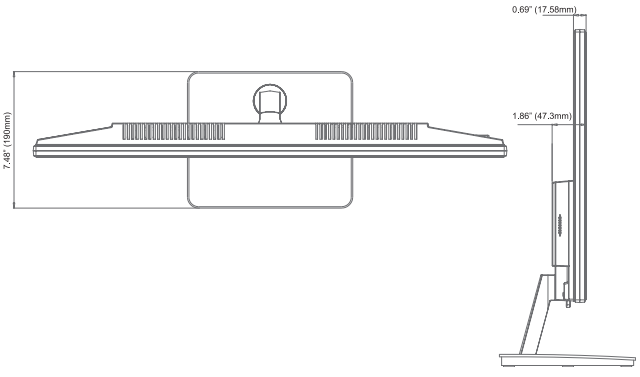

OPTIONAL ACCESSORIES

VT-LCD/PMT
LCD Monitor Swivel Pole



VT-LCD/WMT-R
Rotating LCD Wall Mount



An Eye On Innovation

TRANSCENDENT

www.vitekcctv.com

SINCE 1997